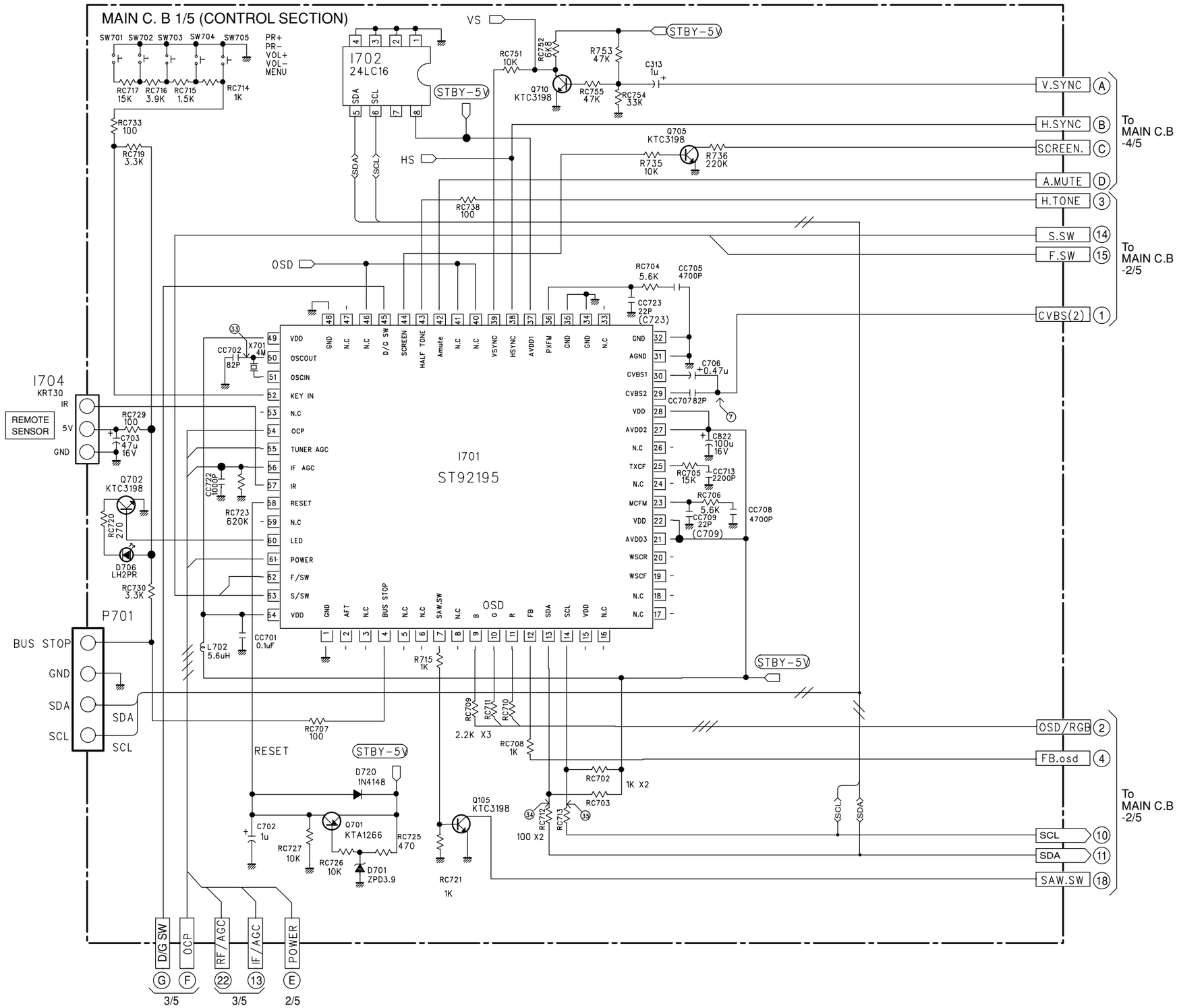
MAIN C. B 1/5 (CONTROL SECTION)
SW701 SW702 SW703 SW704 SW705
PR+
PR−
VOL+
VOL−
MENU
RC717 15K
RC716 3.9K
RC715 1.5K
RC714 1K
RC733 100
RC719 3.3K
I702
24LC16
SDA
SCL
VS
STBY−5V
RC751 10K
RC752 470
R753 47K
C313 1u
Q710 KTC3198
RC755 47K
RC754 33K
HS
Q705 KTC3198
R735 10K
R736 220K
RC738 100
OSD
RC704 5.6K
CC705 4700P
CC723 22P (C723)
I704
KRT30
IR
5V
GND
REMOTE SENSOR
RC729 100
C703 47u 16V
CC702 82P
X701 4M
CC722 1000P
RC723 620K
Q702 KTC3198
RC720 270
D706 LH2PR
RC730 3.3K
P701
BUS STOP
GND
SDA
SCL
L702 5.6uH
CC701 0.1uF
I701
ST92195
VDD
OSCOUT
OSCIN
KEY IN
N.C
OCP
TUNER AGC
IF AGC
IR
RESET
N.C
LED
POWER
F/SW
S/SW
VDD
GND
N.C
N.C
D/G SW
SCREEN
HALF TONE
Amute
N.C
N.C
VSYNC
HSYNC
AVDD1
PXFM
GND
GND
N.C
GND
AGND
CVBS1
CVBS2
VDD
AVDD2
N.C
TXCF
N.C
MCFM
VDD
AVDD3
WSCR
WSCF
N.C
N.C
C706 +0.47u
CC70782P
C822 100u 16V
RC705 15K
CC713 2200P
RC706 5.6K
CC709 22P (C709)
CC708 4700P
OSD
GND
AFT
N.C
BUS STOP
N.C
N.C
SAW.SW
N.C
B
G
R
FB
SDA
SCL
VDD
N.C
R715 1K
RC709
RC711
RC710
2.2K X3
RC707 100
RC708 1K
RESET
D720 1N4148
C702 1u
Q701 KTA1266
RC727 10K
RC726 10K
D701 ZPD3.9
RC725 470
Q105 KTC3198
RC721 1K
RC702
RC703
1K X2
RC712
RC713
100 X2
V.SYNC
H.SYNC
SCREEN.
A.MUTE
H.TONE
S.SW
F.SW
CVBS(2)
To MAIN C.B -4/5
To MAIN C.B -2/5
OSD/RGB
FB.osd
SCL
SDA
SAW.SW
To MAIN C.B -2/5
D/G SW
OCP
RF/AGC
IF/AGC
POWER
3/5
3/5
2/5

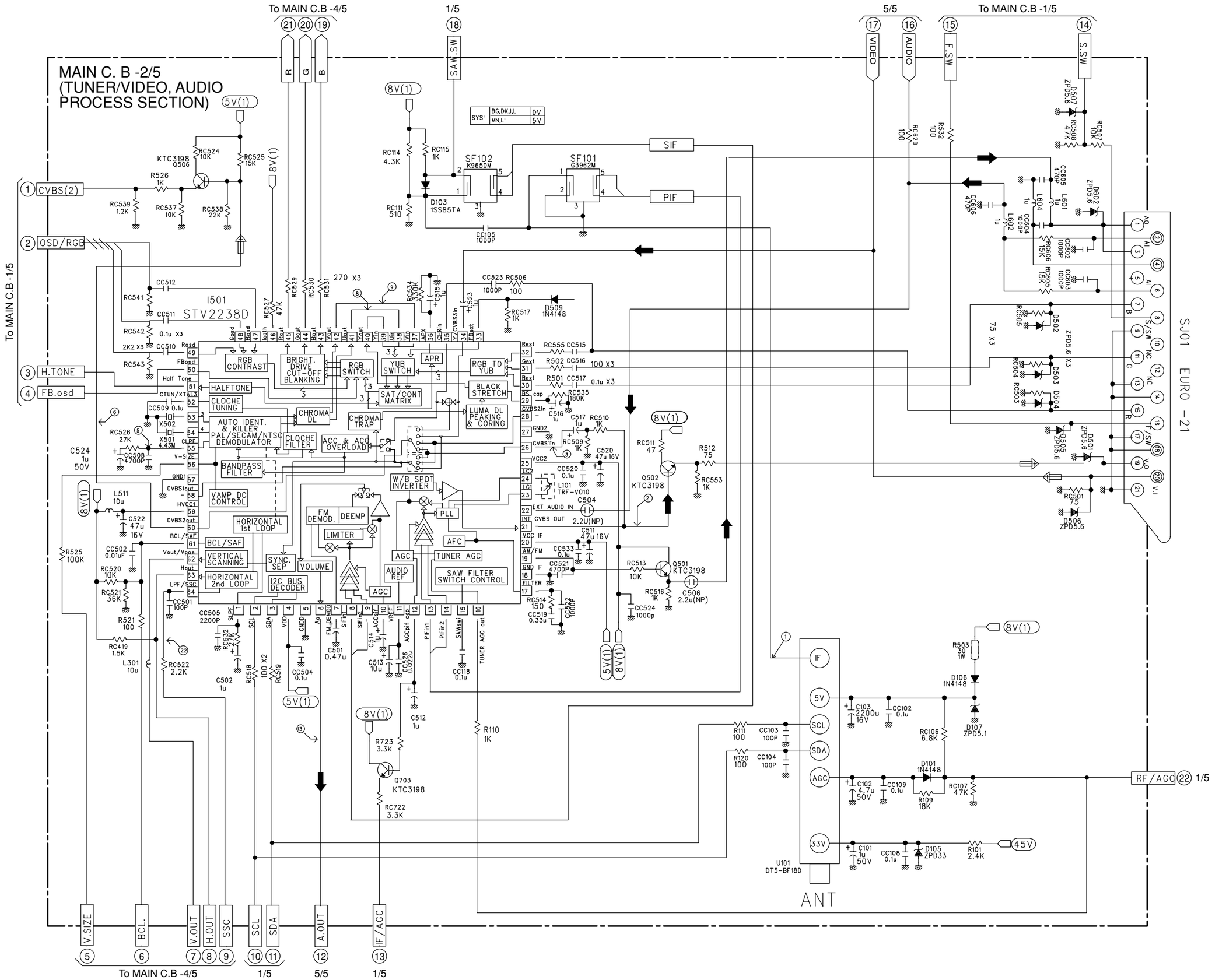
MAIN C. B -2/5
(TUNER/VIDEO, AUDIO
PROCESS SECTION)
To MAIN C.B -4/5
1/5
5/5
To MAIN C.B -1/5
To MAIN C.B -1/5
CVBS(2)
OSD/RGB
H.TONE
FB.osd
R
G
B
SAW.SW
VIDEO
AUDIO
F.SW
S.SW
SIF
PIF
I501
STV2238D
RGB CONTRAST
BRIGHT. DRIVE CUT-OFF BLANKING
RGB SWITCH
YUB SWITCH
APR
RGB TO YUB
HALFTONE
CLOCHE TUNING
SAT/CONT MATRIX
BLACK STRETCH
CHROMA DL
CHROMA TRAP
LUMA DL PEAKING & CORING
AUTO IDENT. & KILLER PAL/SECAM/NTSC DEMODULATOR
CLOCHE FILTER
ACC & ACD OVERLOAD
BANDPASS FILTER
W/B SPOT INVERTER
VAMP DC CONTROL
HORIZONTAL 1st LOOP
FM DEMOD.
DEEMP
LIMITER
PLL
BCL/SAF
VERTICAL SCANNING
SYNC. SEP
VOLUME
AGC
AFC
TUNER AGC
HORIZONTAL 2nd LOOP
I2C BUS DECODER
AUDIO REF
SAW FILTER SWITCH CONTROL
SF102
K9650M
SF101
G3962M
KTC3198
Q502
Q501
Q703
U101
DT5-BF18D
ANT
RF/AGC
V.SIZE
BCL.
V.OUT
H.OUT
SSC
SCL
SDA
A.OUT
IF/AGC
SJ01 EURO -21

TV-C1400

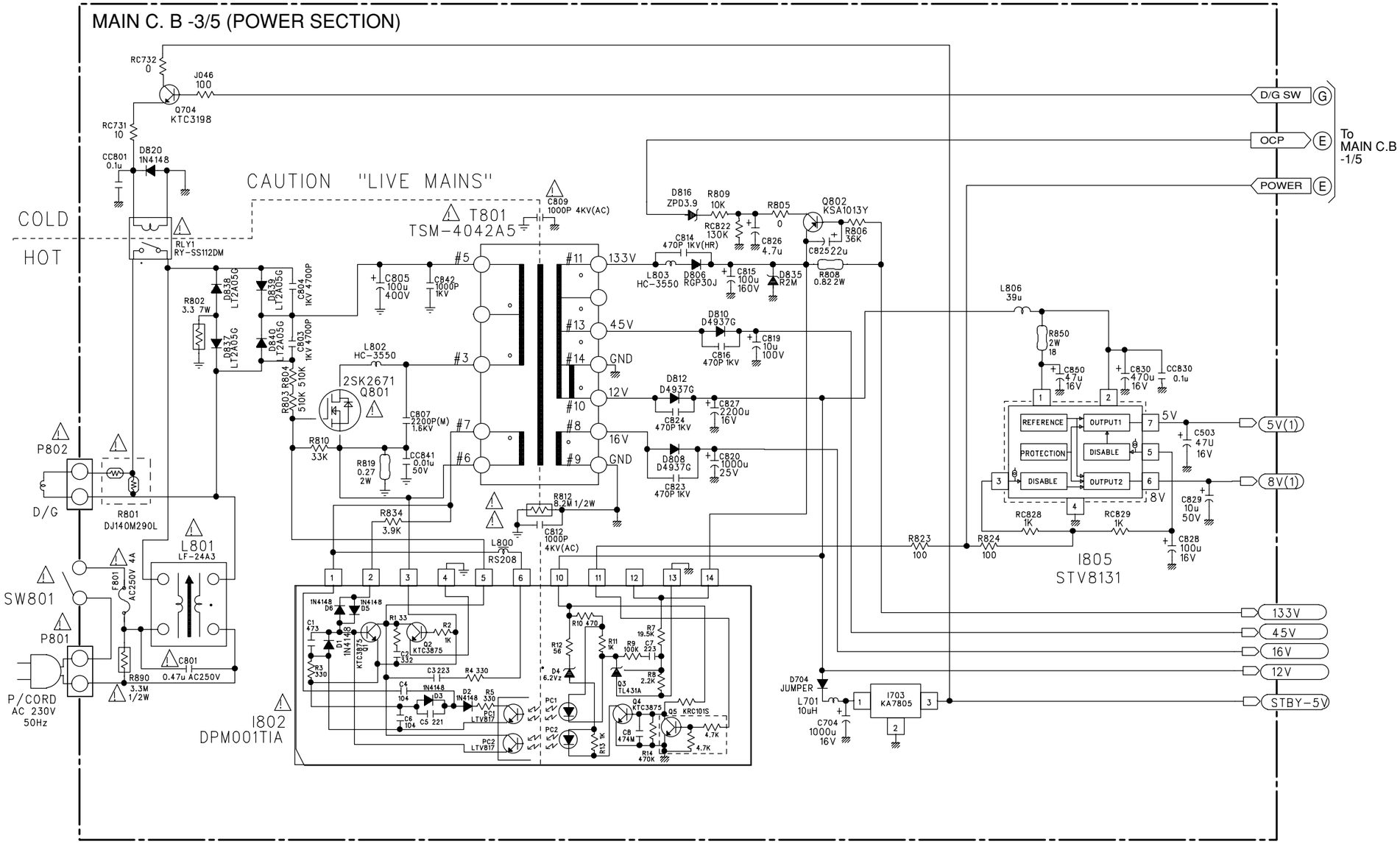
MAIN C. B -3/5 (POWER SECTION)
CAUTION "LIVE MAINS"
COLD
HOT
T801
TSM-4042A5
2SK2671
Q801
I802
DPM001TIA
I805
STV8131
I703
KA7805
L801
LF-24A3
RLY1
RY-SS112DM
R801
DJ140M290L
P/CORD
AC 230V
50Hz
SW801
P801
P802
D/G
D/G SW
OCP
POWER
To
MAIN C.B
-1/5
5V(1)
8V(1)
133V
45V
16V
12V
STBY-5V
REFERENCE
PROTECTION
DISABLE
OUTPUT1
OUTPUT2

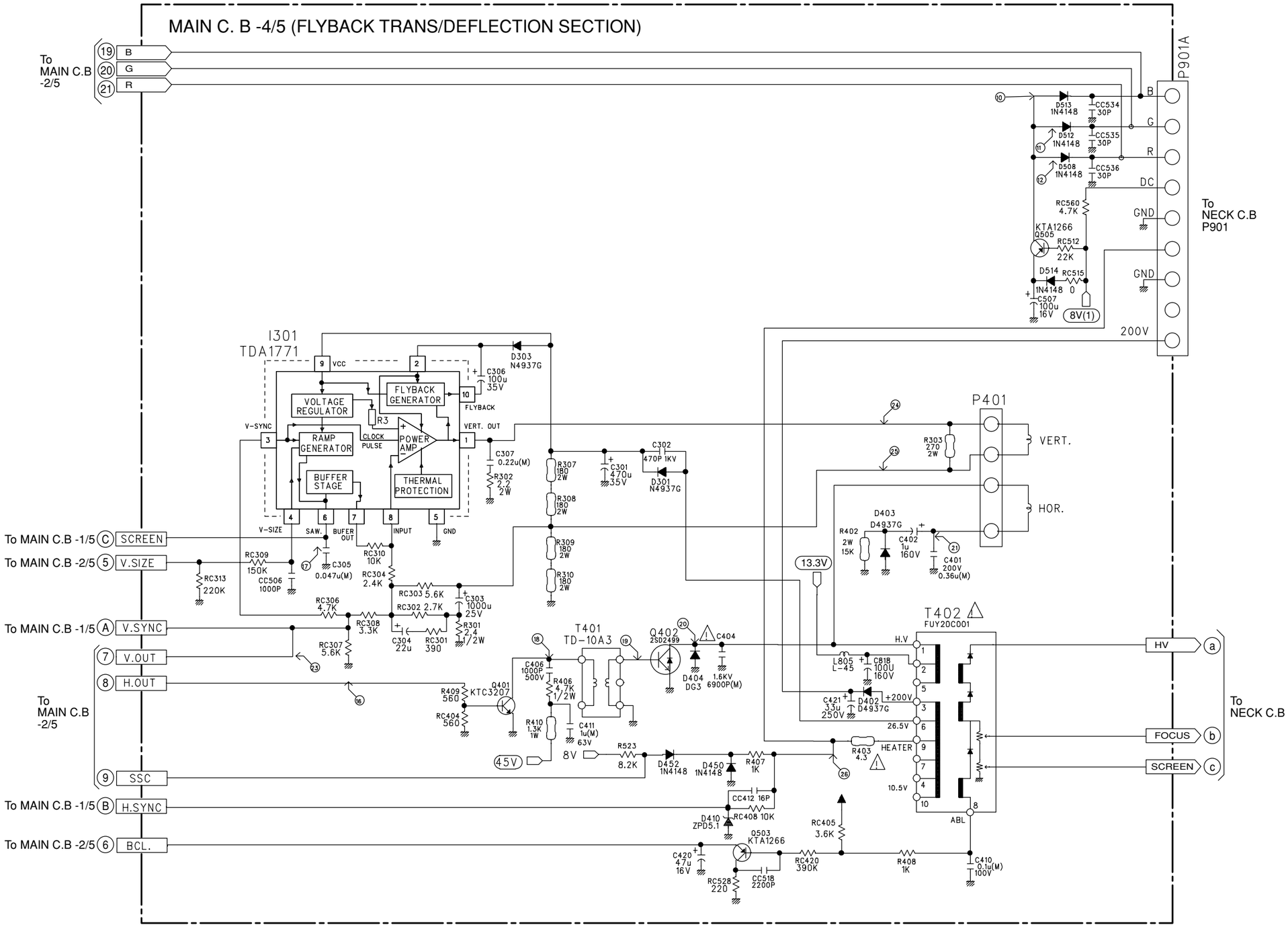
MAIN C. B -4/5 (FLYBACK TRANS/DEFLECTION SECTION)
To MAIN C.B -2/5
B
G
R
P901A
To NECK C.B P901
DC
GND
200V
D513 1N4148
D512 1N4148
D508 1N4148
CC534 30P
CC535 30P
CC536 30P
RC560 4.7K
KTA1266 Q505
RC512 22K
D514 1N4148
RC515 0
C507 100u 16V
8V(1)
I301 TDA1771
VCC
VOLTAGE REGULATOR
FLYBACK GENERATOR
FLYBACK
V-SYNC
RAMP GENERATOR
CLOCK PULSE
POWER AMP
VERT. OUT
BUFFER STAGE
THERMAL PROTECTION
V-SIZE
SAW.
BUFER OUT
INPUT
GND
D303 N4937G
C306 100u 35V
C307 0.22u(M)
R302 2.2 2W
R307 180 2W
R308 180 2W
R309 180 2W
R310 180 2W
C301 470u 35V
C302 470P 1KV
D301 N4937G
P401
VERT.
HOR.
R303 270 2W
D403 D4937G
R402 2W 15K
C402 1u 160V
C401 200V 0.36u(M)
To MAIN C.B -1/5 C SCREEN
To MAIN C.B -2/5 5 V.SIZE
To MAIN C.B -1/5 A V.SYNC
7 V.OUT
8 H.OUT
9 SSC
To MAIN C.B -1/5 B H.SYNC
To MAIN C.B -2/5 6 BCL.
To MAIN C.B -2/5
RC309 150K
CC506 1000P
RC313 220K
C305 0.047u(M)
RC310 10K
RC304 2.4K
RC303 5.6K
C303 1000u 25V
RC306 4.7K
RC308 3.3K
RC302 2.7K
R301 2.4 1/2W
RC307 5.6K
C304 22u
RC301 390
T401 TD-10A3
Q402 2SD2499
C404 1.6KV 6900P(M)
D404 DG3
C406 1000P 500V
R406 4.7K 1/2W
Q401 KTC3207
R409 560
RC404 560
R410 1.3K 1W
C411 1u(M) 63V
45V
8V
R523 8.2K
D452 1N4148
D450 1N4148
R407 1K
13.3V
T402 FUY20C001
H.V
L805 L-45
C818 100U 160V
C421 33u 250V
D402 D4937G
+200V
26.5V
HEATER
R403 4.3
10.5V
ABL
HV
FOCUS
SCREEN
To NECK C.B
CC412 16P
RC408 10K
D410 ZPD5.1
Q503 KTA1266
C420 47u 16V
RC528 220
CC518 2200P
RC420 390K
RC405 3.6K
R408 1K
C410 0.1u(M) 100V

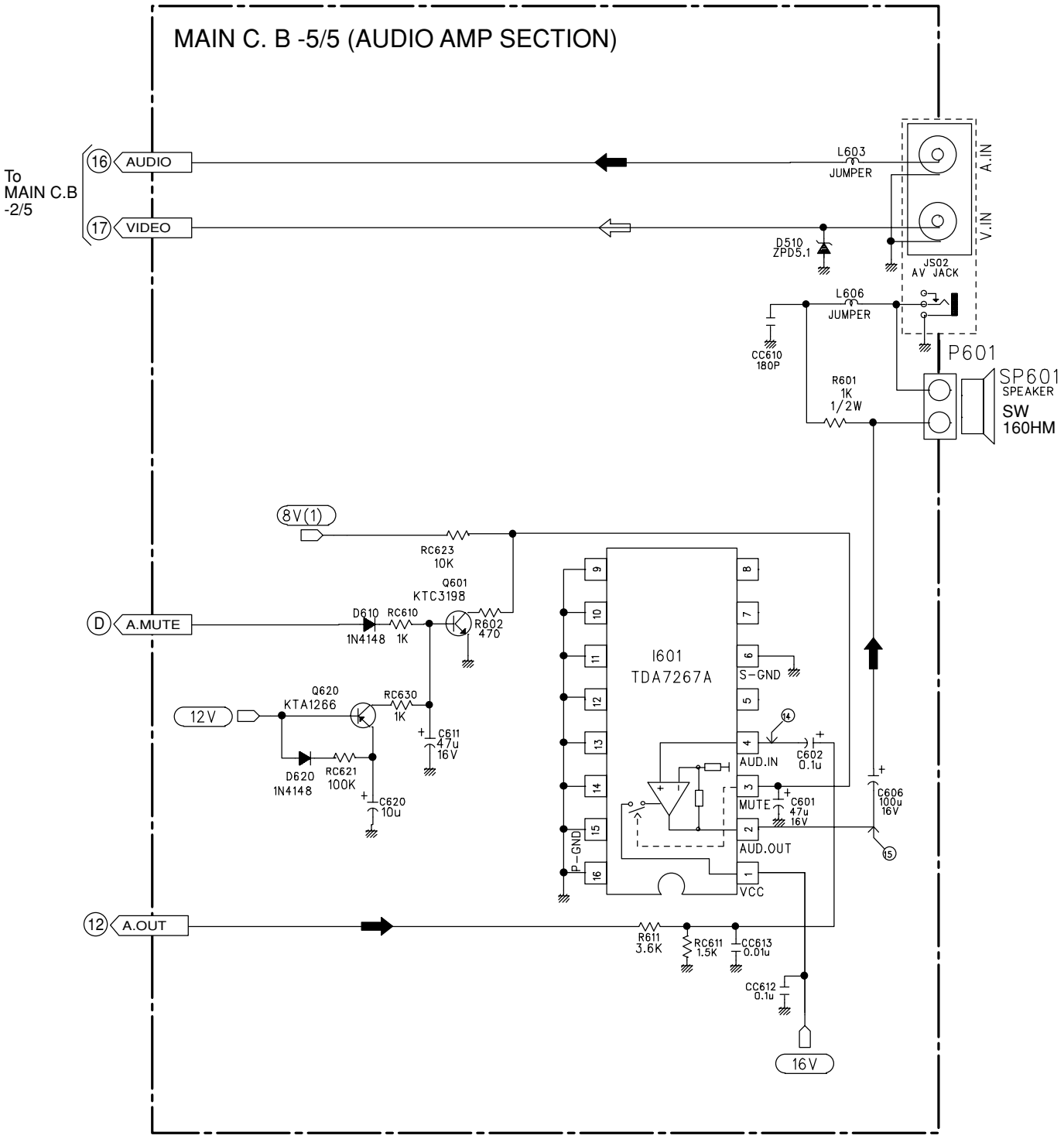
MAIN C. B -5/5 (AUDIO AMP SECTION)
To
MAIN C.B
-2/5
16 AUDIO
17 VIDEO
L603
JUMPER
A.IN
V.IN
D510
ZPD5.1
JS02
AV JACK
L606
JUMPER
CC610
180P
P601
R601
1K
1/2W
SP601
SPEAKER
SW
160HM
8V(1)
RC623
10K
Q601
KTC3198
D A.MUTE
D610
1N4148
RC610
1K
R602
470
12V
Q620
KTA1266
RC630
1K
C611
47u
16V
D620
1N4148
RC621
100K
C620
10u
I601
TDA7267A
S-GND
AUD.IN
C602
0.1u
MUTE
C601
47u
16V
AUD.OUT
VCC
P-GND
C606
100u
16V
12 A.OUT
R611
3.6K
RC611
1.5K
CC613
0.01u
CC612
0.1u
16V

MAIN C. B

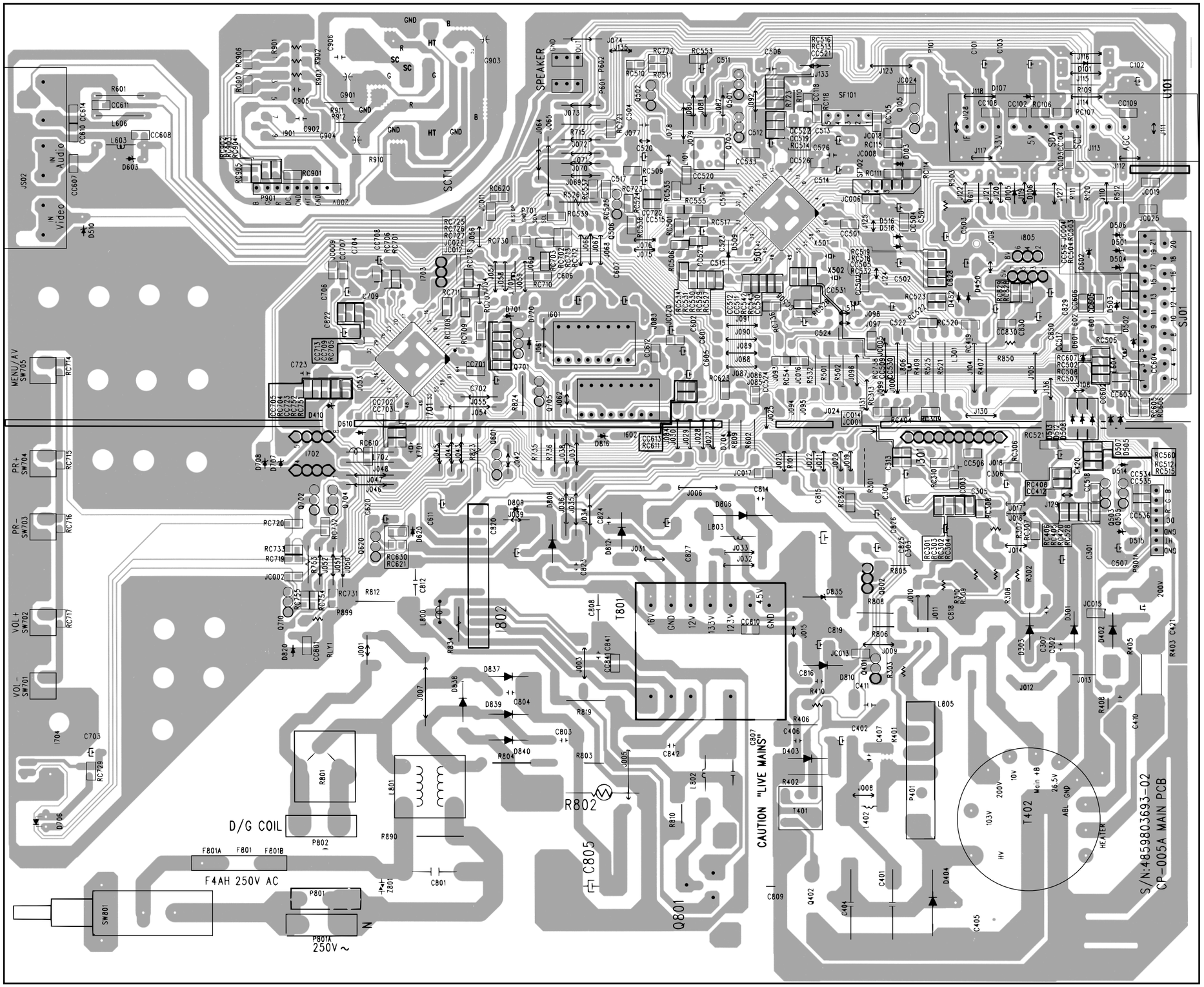
SPEAKER
SCT1
IC101
SJ01
IC501
IC701
IC801
T801
T402
JS02
IN Audio
IN Video
MENU/AV SW705
PR+ SW704
PR- SW703
VOL+ SW702
VOL- SW701
D/G COIL
F4AH 250V AC
250V ~
CAUTION "LIVE MAINS"
S/N:4859803693-02
CP-005A MAIN PCB